WALLAROO 2000 XT
Front View/Closed

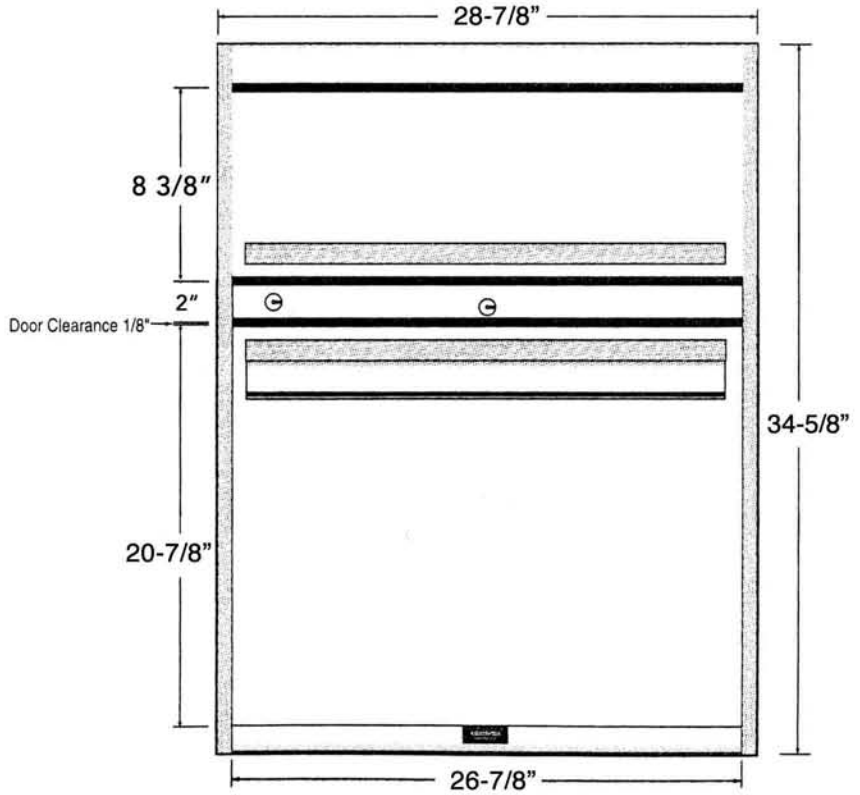

WALLAROO 2000 XT
Side View/Closed

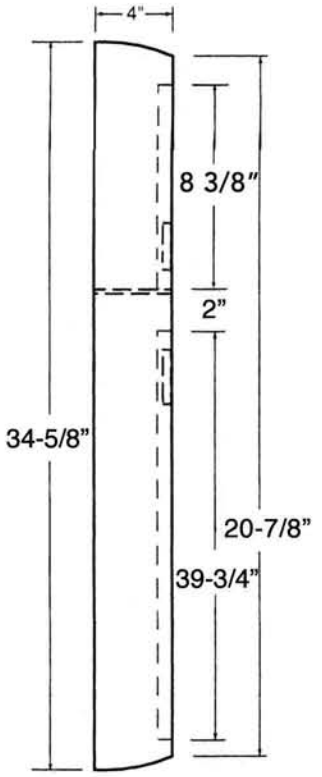

WALLAROO 2000 XT
Front View/Open

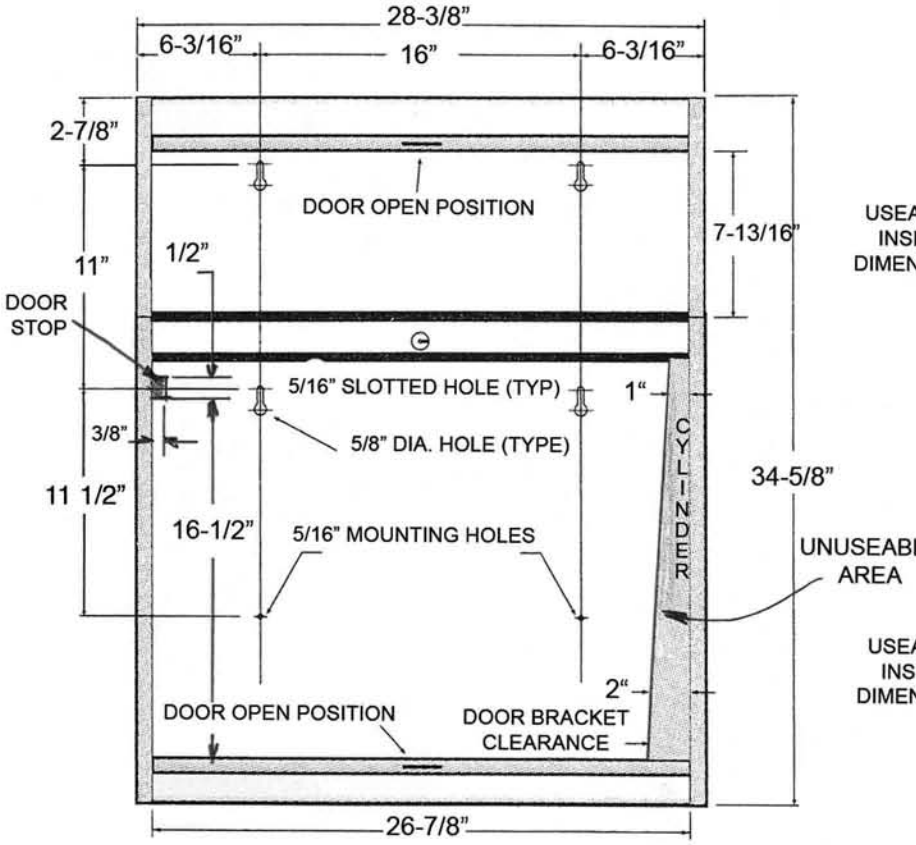

WALLAROO 2000 XT
Side View/Open

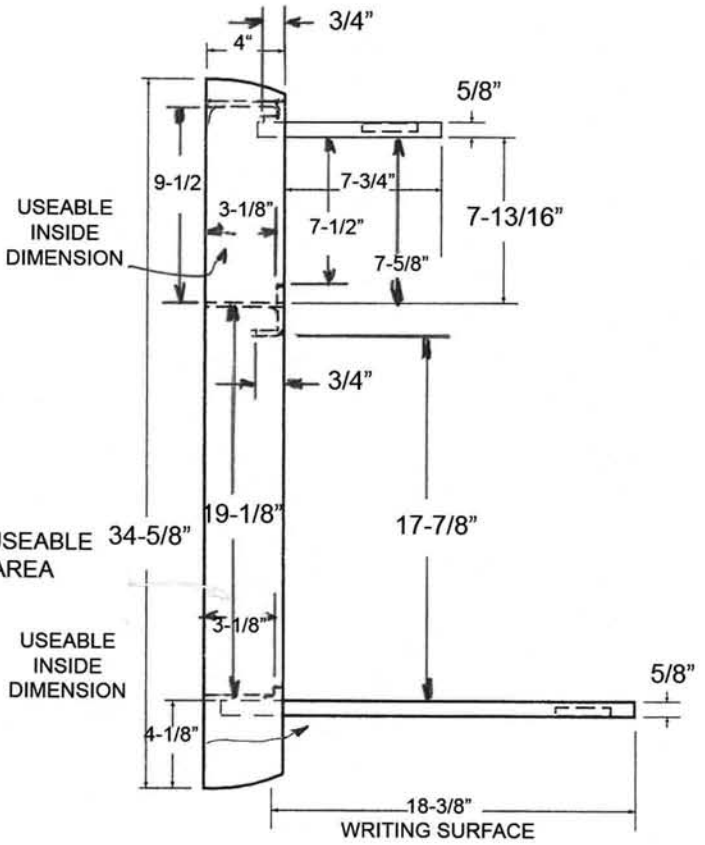

Weight 55 lbs.