WALLAROO 2000 XXT
Front View/Closed
(Recessed Handle)

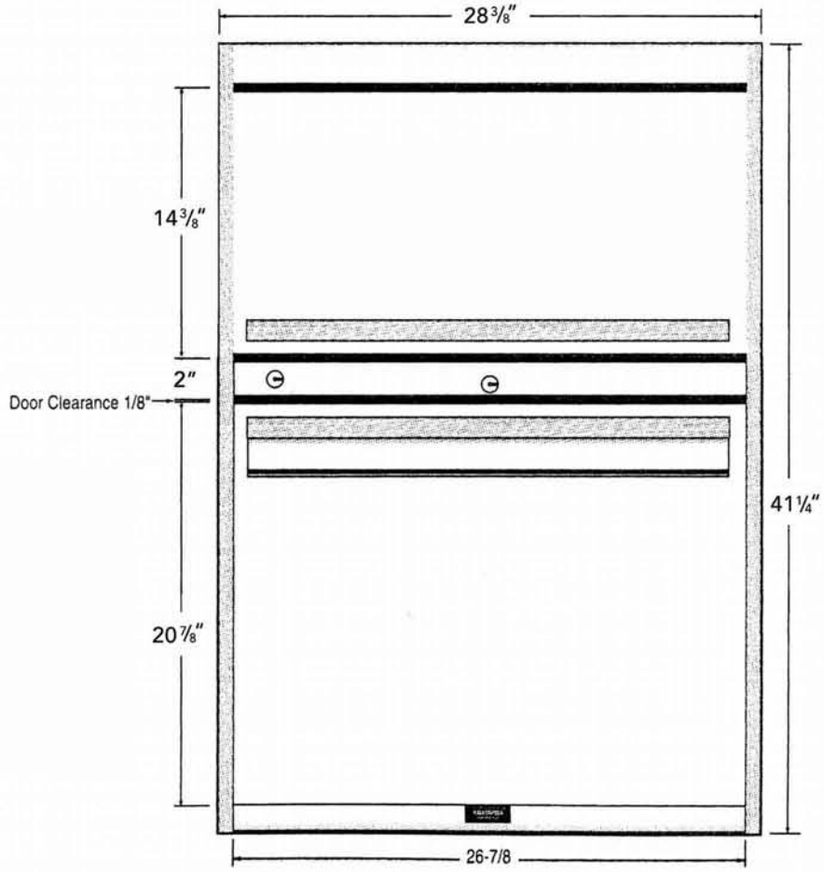

Slotted Hole Detail

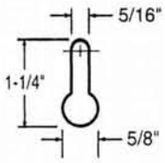

WALLAROO 2000 XXT
Side View/Closed
(Recessed Handle)

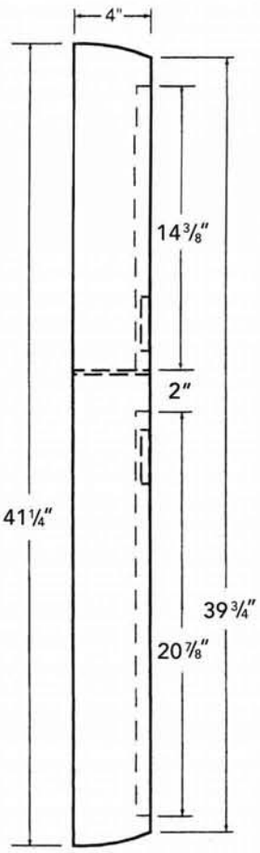

WALLAROO 2000 XXT
Front View/Open

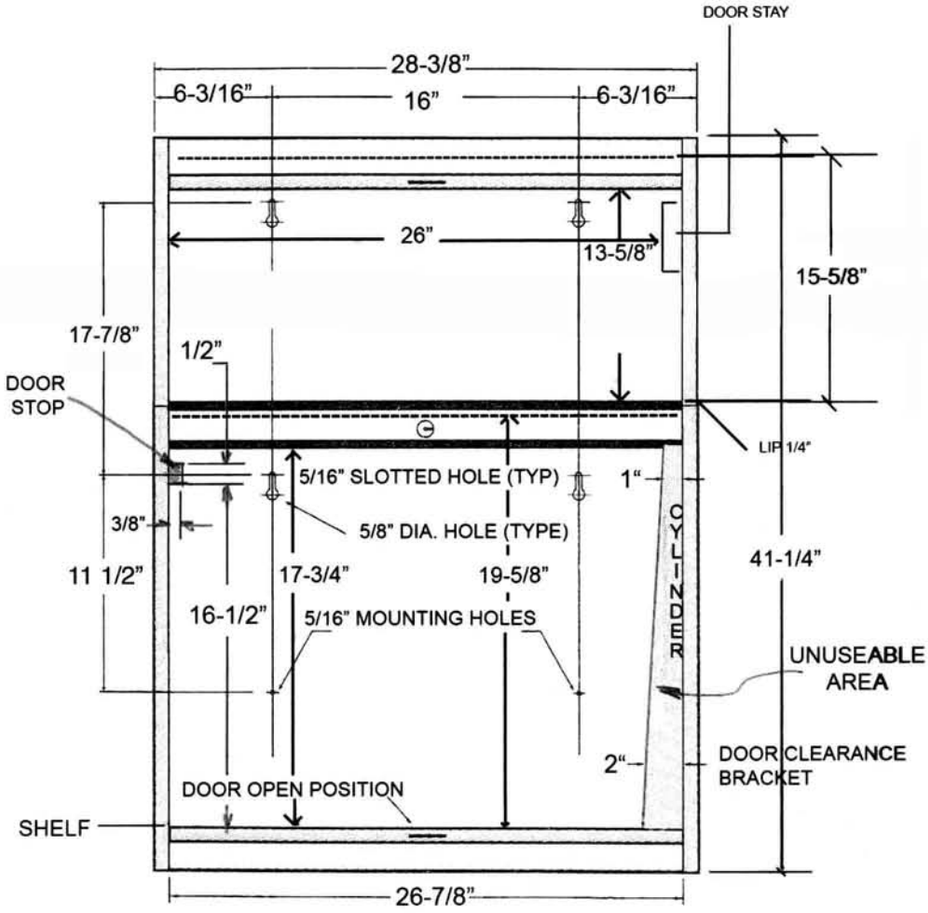
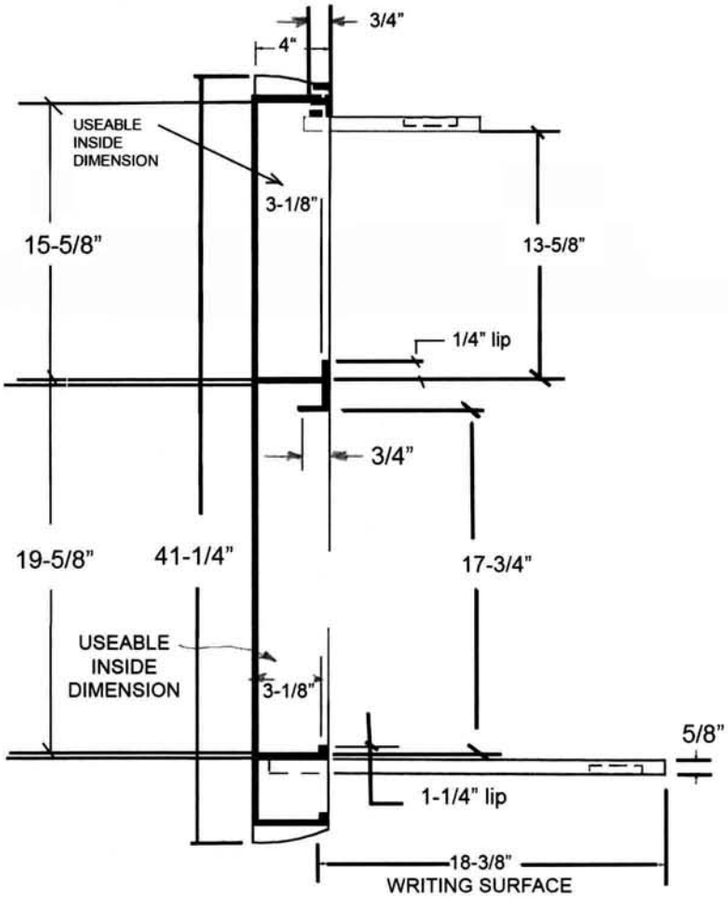
WALLAROO 2000 XXT
Side View/Open
(Usable Compartments only)